Cross Section Drawing

Ultra Full Awning Window
2 1/4" Contour Z-Bar

CAD File Scale	View	File Name	Units
NTS	Horizontal & Vertical	3410U-05 FA	Inch

More Technical Documents can be found at **milgard.com/professionals**

Due to continual research and development, details may be changed at any time. ©2013 Milgard Mfg.

AWNING
SERIES 3410

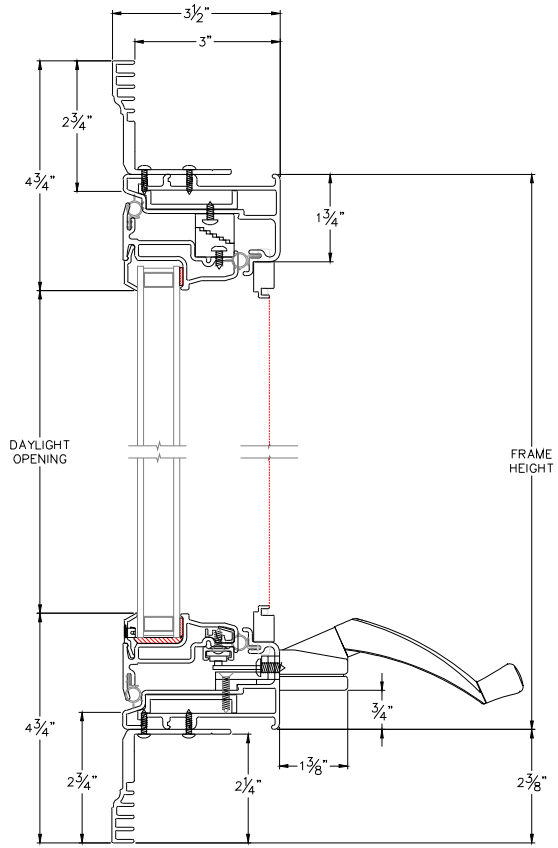

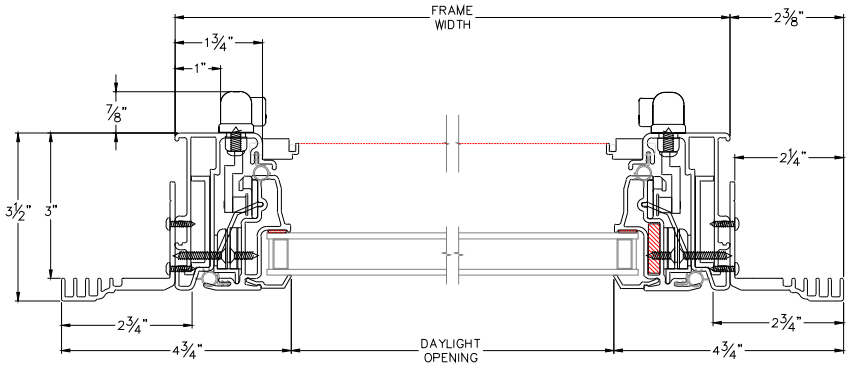

HEAD & SILL

JAMBS